TV TYPEWRITER II - Main PC Board Schematic

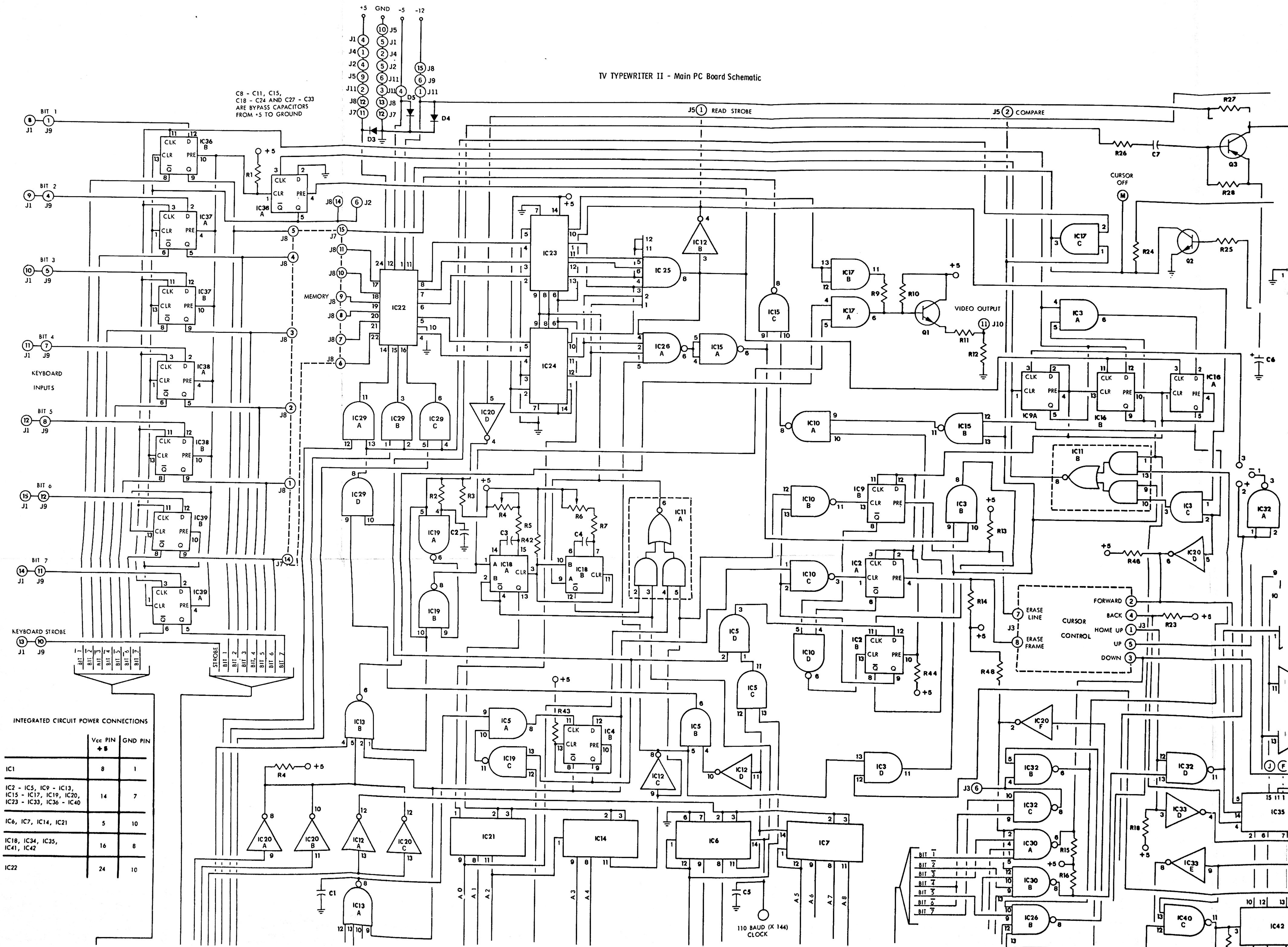
+5
GND
-5
-12
C8 - C11, C15, C18 - C24 AND C27 - C33 ARE BYPASS CAPACITORS FROM +5 TO GROUND
BIT 1
BIT 2
BIT 3
BIT 4
BIT 5
BIT 6
BIT 7
KEYBOARD INPUTS
KEYBOARD STROBE
J1
J9
J8
J7
MEMORY
IC36 A
IC36 B
IC37 A
IC37 B
IC38 A
IC38 B
IC39 A
IC39 B
CLK
D
CLR
PRE
Q
R1
IC22
IC23
IC24
IC25
IC26 A
IC12 B
IC15 A
IC15 B
IC15 C
IC17 A
IC17 B
IC17 C
J5 ① READ STROBE
J5 ② COMPARE
R27
R26
C7
Q3
R28
CURSOR OFF
M
R24
Q2
R25
R9
R10
Q1
VIDEO OUTPUT
⑪ J10
R11
R12
C6
IC3 A
IC9A
IC16 A
IC16 B
IC29 A
IC29 B
IC29 C
IC29 D
IC20 D
IC10 A
IC10 B
IC10 C
IC10 D
IC9 B
IC3 B
IC3 C
IC11 A
IC11 B
IC32 A
IC19 A
IC19 B
IC19 C
R2
R3
R4
R5
R6
R7
C2
C3
C4
R42
IC18 A
IC18 B
R13
R46
IC2 A
IC2 B
R14
R44
R48
ERASE LINE
ERASE FRAME
CURSOR CONTROL
FORWARD
BACK
HOME UP
UP
DOWN
J3
R23
IC5 A
IC5 B
IC5 C
IC5 D
IC13 A
IC13 B
R4
R43
IC4 B
IC12 C
IC12 D
IC3 D
IC20 A
IC20 B
IC20 C
IC20 F
IC12 A
C1
IC21
IC14
IC6
IC7
A0
A1
A2
A3
A4
A5
A6
A7
A8
C5
110 BAUD (X 144) CLOCK
IC32 B
IC32 C
IC32 D
IC30 A
IC30 B
IC26 B
IC33 D
IC33 E
IC40 C
R15
R16
R18
IC35
IC42
STROBE
D3
D4
D5

INTEGRATED CIRCUIT POWER CONNECTIONS

	Vcc PIN +5	GND PIN
IC1	8	1
IC2 - IC5, IC9 - IC13, IC15 - IC17, IC19, IC20, IC23 - IC33, IC36 - IC40	14	7
IC6, IC7, IC14, IC21	5	10
IC18, IC34, IC35, IC41, IC42	16	8
IC22	24	10

TV TYPEWRITER II - Main PC Board Schematic

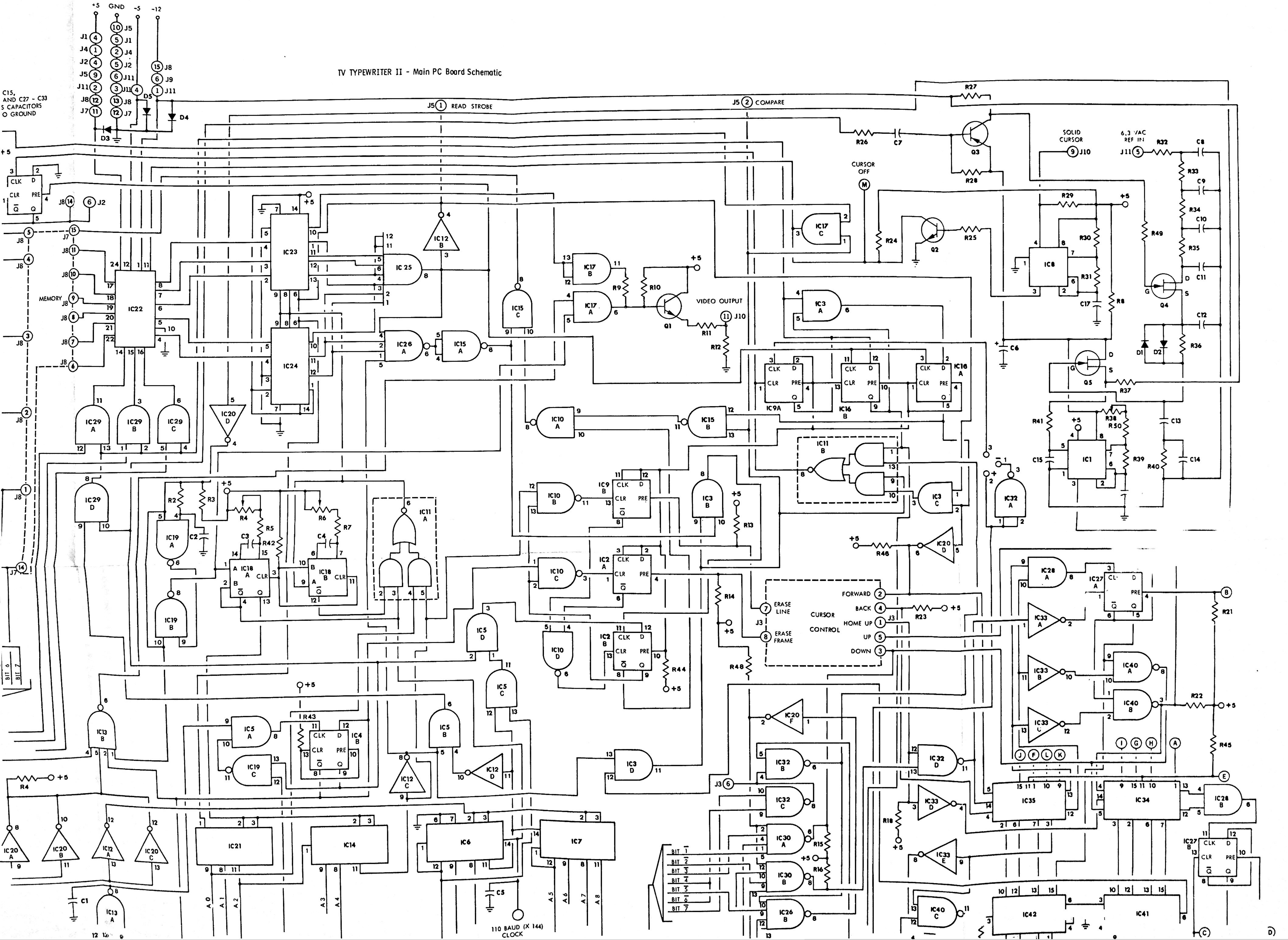
+5
GND
-5
-12
C15,
AND C27 - C33
S CAPACITORS
O GROUND
D3
D4
D5
J5 ① READ STROBE
J5 ② COMPARE
R27
R26
C7
Q3
R28
SOLID CURSOR
⑨ J10
6.3 VAC REF IN
J11 ⑤
R32
C8
R33
C9
R34
C10
R35
C11
C12
R36
D1
D2
Q4
Q5
R37
CURSOR OFF
Ⓜ
IC17 C
R24
Q2
R25
R29
R30
R31
IC8
C17
R8
R49
C6
IC12 B
IC23
IC24
IC22
IC25
IC26 A
IC15 A
IC15 C
IC17 B
IC17 A
R9
R10
Q1
VIDEO OUTPUT
⑪ J10
R11
R12
IC3 A
IC9A
IC16 B
IC16 A
IC10 A
IC15 B
IC11 B
IC3 C
IC32 A
R41
R38
R50
R39
R40
C13
C14
C15
IC1
MEMORY
IC29 A
IC29 B
IC29 C
IC29 D
IC20 D
R2
R3
R4
R5
R6
R7
C2
C3
C4
R42
IC19 A
IC19 B
IC18 A
IC18 B
IC11 A
IC10 B
IC9 B
IC3 B
R13
R46
IC20 D
IC10 C
IC2 A
R14
IC10 D
IC2 B
R44
R48
CURSOR CONTROL
ERASE LINE
ERASE FRAME
FORWARD
BACK
HOME UP
UP
DOWN
J3
R23
IC28 A
IC27 A
IC33 A
IC33 B
IC33 C
IC40 A
IC40 B
R21
R22
R45
Ⓑ
Ⓔ
Ⓙ Ⓕ Ⓛ Ⓚ
Ⓘ Ⓖ Ⓗ
Ⓐ
IC5 D
IC5 C
IC5 A
IC5 B
IC19 C
IC4 B
R43
IC12 C
IC12 D
IC3 D
IC13 B
IC20 F
IC32 B
IC32 C
IC32 D
IC30 A
IC30 B
IC26 B
R15
R16
IC33 D
IC33 E
R18
IC35
IC34
IC28 B
IC27 B
IC40 C
IC42
IC41
Ⓒ
D)
IC20 A
IC20 B
IC12 A
IC20 C
IC21
IC14
IC6
IC7
C1
C5
IC13 A
A0
A1
A2
A3
A4
A5
A6
A7
A8
110 BAUD (X 144) CLOCK
BIT 1
BIT 2
BIT 3
BIT 4
BIT 5
BIT 6
BIT 7
J1
J2
J3
J4
J5
J7
J8
J9
J11

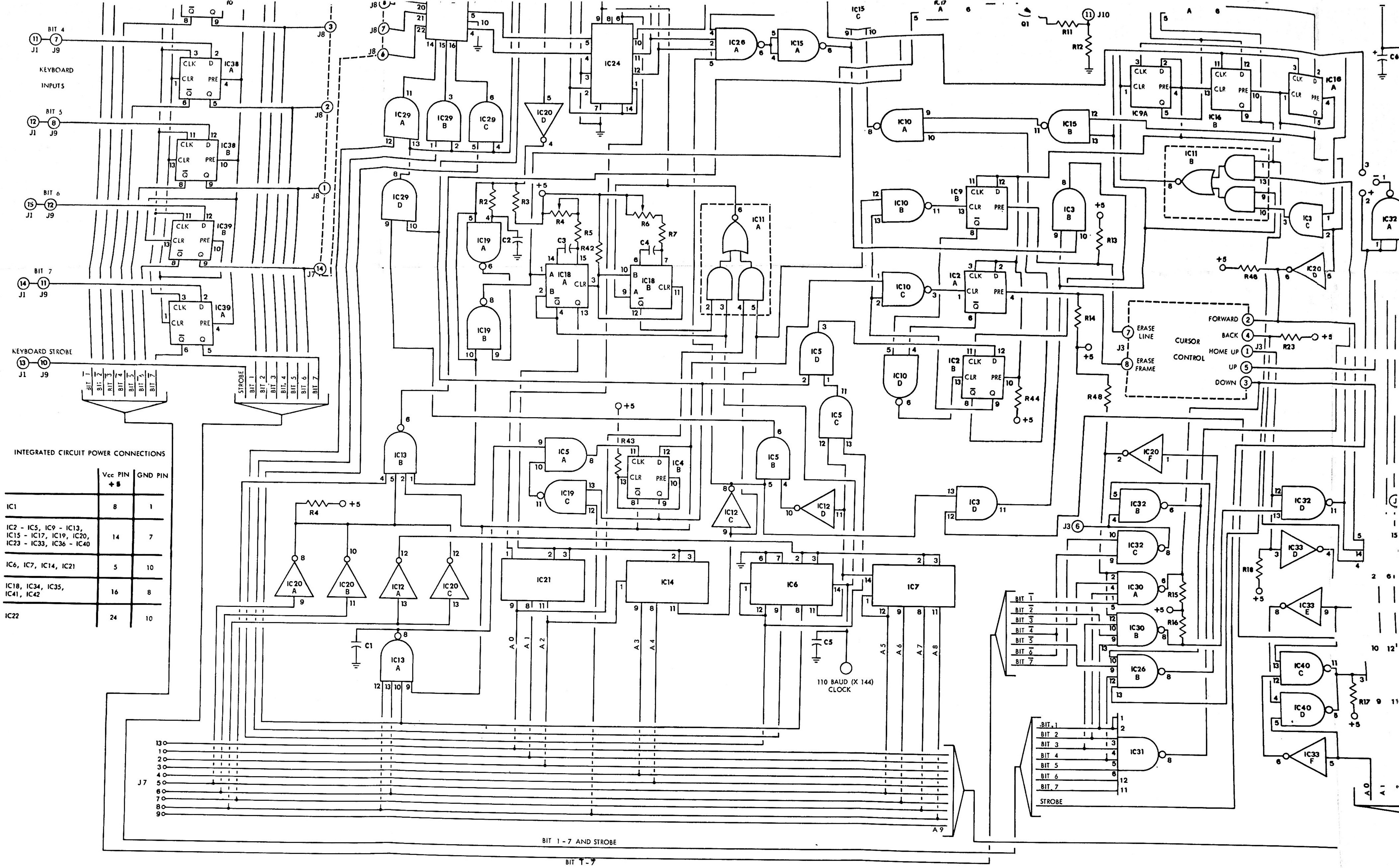
KEYBOARD INPUTS
BIT 4
BIT 5
BIT 6
BIT 7
KEYBOARD STROBE
J1
J9
J8
J7
J3
J10
IC38 A
IC38 B
IC39 B
IC39 A
CLK
D
CLR
PRE
Q
IC29 A
IC29 B
IC29 C
IC29 D
IC20 D
IC24
IC26 A
IC15 A
IC15 C
IC17 A
Q1
R11
R12
IC9A
IC16 B
IC16 A
IC10 A
IC15 B
IC11 B
IC10 B
IC9 B
IC3 B
IC3 C
IC32 A
IC19 A
IC19 B
IC18 A
IC18 B
IC11 A
R2
R3
R4
R5
R6
R7
R42
C2
C3
C4
IC10 C
IC2 A
IC2 B
IC10 D
IC20 D
R48
R13
R14
R44
R23
+5
ERASE LINE
ERASE FRAME
CURSOR CONTROL
FORWARD
BACK
HOME UP
UP
DOWN
IC5 C
IC5 D
IC5 A
IC5 B
IC4 B
R43
IC19 C
IC12 C
IC12 D
IC13 B
R4
IC20 A
IC20 B
IC12 A
IC20 C
IC13 A
C1
IC21
IC14
IC6
IC7
C5
110 BAUD (X 144) CLOCK
A 0
A 1
A 2
A 3
A 4
A 5
A 6
A 7
A 8
A 9
IC20 F
IC3 D
IC32 B
IC32 C
IC32 D
IC30 A
IC30 B
IC26 B
IC31
IC33 D
IC33 E
IC33 F
IC40 C
IC40 D
R15
R16
R17
R18
C6
BIT 1–7 AND STROBE
STROBE
BIT 1
BIT 2
BIT 3
BIT 5
BIT 6
BIT 7
BIT 1 – 7
BIT 1–7 AND STROBE

INTEGRATED CIRCUIT POWER CONNECTIONS

	Vcc PIN +5	GND PIN
IC1	8	1
IC2 - IC5, IC9 - IC13, IC15 - IC17, IC19, IC20, IC23 - IC33, IC36 - IC40	14	7
IC6, IC7, IC14, IC21	5	10
IC18, IC34, IC35, IC41, IC42	16	8
IC22	24	10

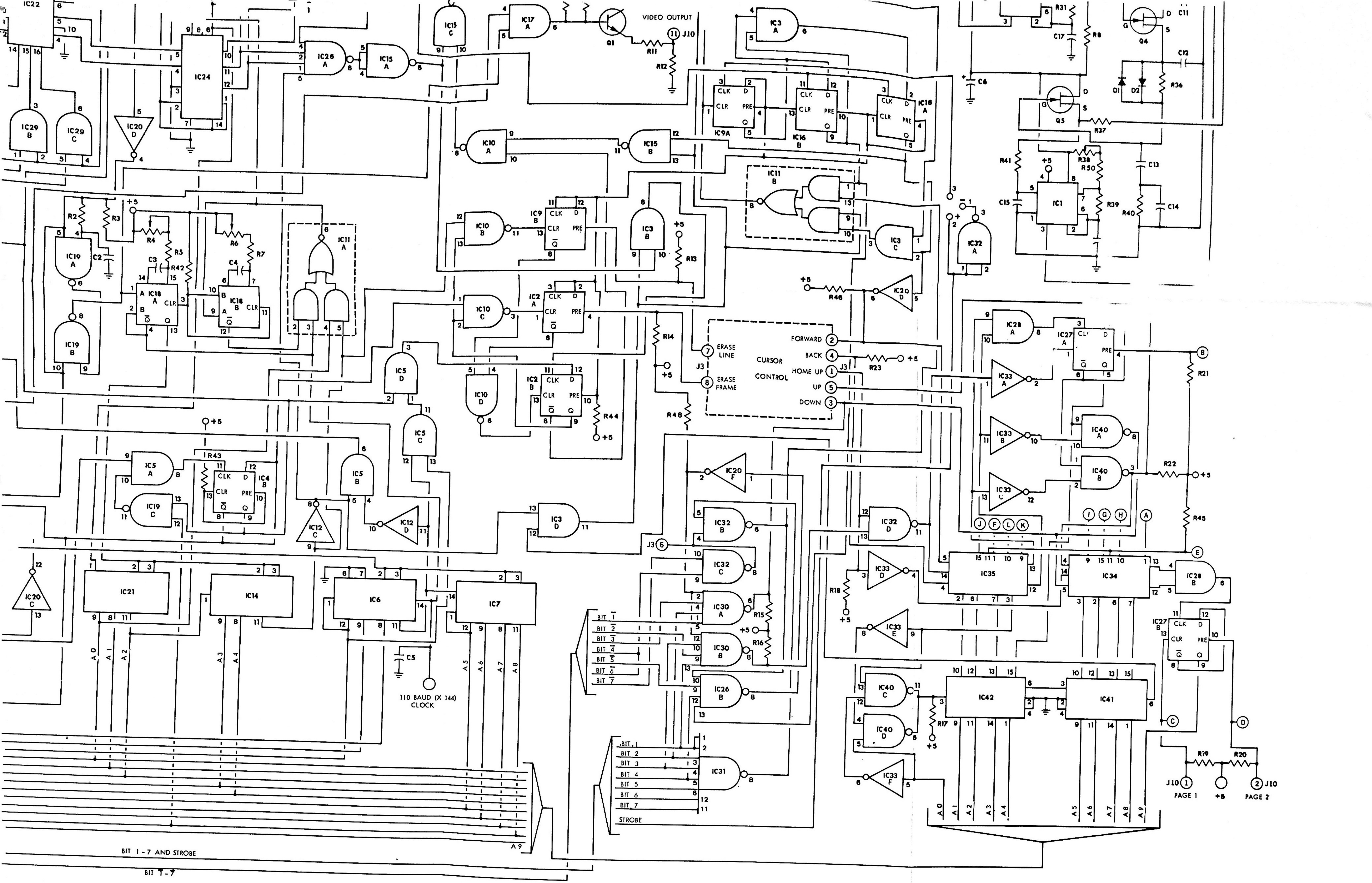
IC22
IC24
IC26 A
IC15 A
IC15 C
IC17 A
Q1
VIDEO OUTPUT
J10
R11
R12
IC3 A
R31
C17
R8
Q4
C11
C12
C6
D1
D2
R36
Q5
R37
IC29 B
IC29 C
IC20 D
IC10 A
IC15 B
IC9A
IC16 B
IC16 A
R41
R38
R50
C13
C15
IC1
R39
R40
C14
R2
R3
+5
R4
R5
R6
R7
IC19 A
C2
C3
R42
C4
IC18 A
IC18 B
IC11 A
IC10 B
IC9 B
IC3 B
R13
IC11 B
IC3 C
IC32 A
IC19 B
IC10 C
IC2 A
R14
+5
R46
IC20 D
IC5 D
IC10 D
IC2 B
R44
R48
ERASE LINE
ERASE FRAME
J3
CURSOR CONTROL
FORWARD
BACK
HOME UP
UP
DOWN
R23
IC28 A
IC27 A
R21
IC33 A
IC33 B
IC40 A
IC33 C
IC40 B
R22
R45
IC5 C
IC5 A
R43
IC4 B
IC19 C
IC5 B
IC12 D
IC12 C
IC3 D
IC20 F
IC32 B
IC32 C
IC32 D
IC33 D
IC35
IC34
IC28 B
R18
IC33 E
IC27 B
IC20 C
IC21
IC14
IC6
IC7
IC30 A
IC30 B
R15
R16
IC26 B
IC40 C
IC40 D
IC42
IC41
R17
IC33 F
IC31
C5
110 BAUD (X 144) CLOCK
A0
A1
A2
A3
A4
A5
A6
A7
A8
A9
BIT 1̄
BIT 2̄
BIT 3̄
BIT 4̄
BIT 5̄
BIT 6̄
BIT 7̄
BIT 1
BIT 2
BIT 3
BIT 4
BIT 5
BIT 6
BIT 7
STROBE
BIT 1 - 7 AND STROBE
BIT 1̄ - 7
R19
R20
J10
PAGE 1
+5
PAGE 2
A
B
C
D
E
F
G
H
I
J
K
L